International Journal of Engineering

Journal Homepage: www.ije.ir

A Hybrid Fuzzy Multi-criteria Decision Making Model Based on Fuzzy DEMATEL with Fuzzy Analytical Network Process and Interpretative Structural Model for Prioritizing LARG Supply Chain Practices

Z. Akbarzadeh, A. H. Safaei Ghadikolaei*, M. Madhoushi, H. Aghajani

Department of Industrial Management, University of Mazandaran, Babolsar, Iran

P A P E R I N F O

Paper history:
Received 02 January 2018
Received in revised form 29 March 2018
Accepted 27 May 2018

Keywords:
LARG Supply Chain
LARG Practices
FDANP Technique
Interpretative Structural Model
Dairy Industries

A B S T R A C T

In recent years, taking advantage of LARG supply chain (SC) paradigm, a combination of four paradigms (clean, agile, resilience and green) has been increasingly employed. For capturing the advantages of LARG in SC, companies needed to recognize proper practices and implement them with appropriate planning and infrastructure. However, one of its deficiencies is lack of proper method in the prioritization of the LARG paradigms and practices as well as explanation of their relationship. Hence, the main contribution of this paper is to present a comprehensive approach to deal with inherent vagueness and uncertainty of the human decision process using fuzzy set theory, it aims to provide a quantitative basis via a hybrid fuzzy multi-criteria decision making (FMCDM) model that will make easy data collection and shall decrease the calculation. This model combines fuzzy decision making trial and evaluation laboratory (DEMATEL) with fuzzy analytical network process (ANP), i.e. FDANP, to determine the global weights of paradigms and practices and develop their impact relation map. Finally, the implementation of practice was prioritized by using interpretative structural model (ISM). It should be noted that, to measure the efficiency of this method, Iranian dairy industries as a case study was considered. With the help of obtained results, it can be determined the most and the least important practices and paradigms and prioritization of their implementation.

***doi**: 10.5829/ije.2019.32.03c.09*

1. INTRODUCTION

Supply Chain Management (SCM) utilizes some special methods for the planning of manufacturing and distribution activities in various decision making levels in order to have flow of materials, money and information in an effective way to meet the business requirements [1, 2]. Today, Supply Chain (SC) and logistics' operations have been identified as the most important activities in companies [3]; based on literature, its most frequently benefits are cost saving, inventory reduction, visibility increase and reduction in bullwhip effect [4]. In this regards, many researchers believe that applying appropriate paradigm in supply chain usually impacts on the company's performance directly, especially for the main players [5]. In past two decades, four paradigms of lean, agile, resilient and green were the key paradigms of SC in the business and industrial fields. These researches were developed on two main fields, namely the development of the model or a method for examining the relationship between LARG SC practices, the performance and increase in the SC competitiveness [6-13], studying the compatibility of practices related to LARG SC paradigms [14-18]. So far, to the best of our knowledge, no research has been conducted to identify the LARG SC practices and to clarify the relationships among them in dairy industries, which represents a significant theoretical and empirical gap in this area. The world of dairy industry is changing due to great concerns about more efficiency in order to produce lower-cost products, quick response to customers diversified demands, reduce disruption and risks in supply, produce and distribute perishable products, and also produce organic products with environment-friendly packaging and so on [19].

*Corresponding Author Email: *ab.safaei@umz.ac.ir* (A. H. Safaei Ghadikolaei)

Please cite this article as: Z. Akbarzadeh, A. H. Safaei Ghadikolaei, M. Madhoushi, H. Aghajani, A hybrid Fuzzy Multi-criteria Decision Making Model based on fuzzy DEMATEL with fuzzy Analytical Network Process and Interpretative Structural Model for Prioritizing LARG Supply Chain Practices, International Journal of Engineering (IJE), IJE TRANSACTIONS C: Aspects Vol. 32, No. 3, (March 2019) 413-423

Archive of SID

www.SID.ir

These changes necessitate the adoption of paradigm in the dairy industry SC that can reduce these concerns. The present study is seeking to use the LARG SC paradigm; because it is considered as the foundation of a competitive SC that could improve SC performance by eliminating processes that add no value, responding rapidly to changes in demand (in terms of both volume and variety), responding effectively to unexpected disturbances and reducing environmental risks and impacts. Given the above cases, the structuring of impact relations and determining the priority practice implementation to move towards LARG paradigm is of the great importance. Since, it provides the SC super-entity with the opportunity to take advantage of the LARG paradigm by using important practices in the SC domain.

Based on the above mentioned problem, a computational model is needed, which can fulfill the gap, increase the accuracy of decisions and reduce the required time. In this respect, the main purpose of the present research is to develop a functional decision making model, hybrid fuzzy multi-criteria decision making (FMCDM), that can improve the performance of LARG paradigm in dairy industries SC. Therefore, an efficient method for analyzing and identifying the relationship between LARG SC practices in dairy industry by using a novel application of combined fuzzy decision making trial and evaluation laboratory (FDEMATEL) with fuzzy analytic network process (FANP), FDANP, and interpretative structural model (ISM) can be considered as the main contributions of this paper.

In recent years, there are increasing applications of FMCDM in order to make an appropriate decision. One of the efficient FMCDM methods is novel combination of FDEMATEL with FANP, FDANP, as a powerful tool that reduces the number of pair wise comparison matrices and simplifies the calculating process [20]. In this novel approach, the total relation matrix of DEMATEL is converted to an initial super matrix with a joint process, which in DEMATEL is considered as a main system and ANP is sub-system [21]. In the traditional combined approach of ANP and DEMATEL, however, the ANP is considered as the main system of decision making and DEMATEL is applied as a sub–system, so that the inner dependence matrix of DEMATEL was part of the initial super matrix in ANP.

ISM is a qualitative and interpretive method in which the effect of each factor on other factors was studied [22]. It analyzes the relations with factor through decomposing them into several different levels [23]. ISM as an interactive learning process, constructs a set of various connected variables directly and indirectly as a comprehensive systematic model [24]. The model has formed the structure of a complex subject in an appropriate pattern using graphics as well as words. The method helps recognition of the complex relationships between the variables of a system so the influence can be analyzed between the variables [25].

The structure of the rest of the paper will be as follows. In the next section a research on LARG practices will be extracted and localized in dairy industries SC. Followed by the importance of SC practices in dairy industries is determined and impact relations are structured among them. Finally, the priority of practice implementation will be conducted so that dairy companies can take advantage of the sustainable competitive advantage in today's turbulent markets.

2. LARG SUPPLY CHAIN

Nowadays, in developing countries, companies focused on SC processes, that this concept plays an effective role in creating the value of real economic goods and services [26]. On the other hand, in today's turbulent and uncertain environments applying one-dimensional approaches in SC have been losing their abilities and capabilities. The combined LARG SC paradigm is an appropriate approach for facing the challenges. The simultaneous implementation of the "lean, agile, resilient and green" SC paradigms was first proposed by Carvalho and Machado [27] in an international conference on "Management Science and Engineering". Subsequently, Azevedo, Carvalho, and Machado [6] put forward the term of the "LARG SC" in a research for the first time in 2011. Many researchers support LARG paradigm as the basis for SC management [28]. LARG SC focuses on integrating lean, agile, resilient and green paradigms in order to strengthen convergence and reduce the divergence of each of them [29]. The LARG SC paradigm simultaneously addresses the issues of reducing non-value-added activities, quick response to customer demands, overcoming disruptions, and also reducing environmental impacts in a SC [28].Various studies have been conducted on the SC, and researchers have looked at this new paradigm from a variety of perspectives. Carvalho et al. [14] applied an exploratory case study approach to identify dealings among LARG paradigms in the automotive SC. Azevedo et al. [7] and Maleki and Machado [13] developed a conceptual model to examine the relationships between LARG SC management practices and SC performance metrics. Maleki et al. [12] presented an integrated model to investigate the effect of LARG SC implementation on customer values. Cruz et al. [15] examined the compatibility of practices related to LARG SC paradigms in an automotive company in Portugal. Santos [18], using the SC simulation model, analyzed the effect of the compatibility of LARG practices on the performance of the Portuguese automotive SC. Azevedo et al. [8] examined the effect of LARG practices paradigms on the

Archive of SID

www.SID.ir

performance of the SC from three operational, economic, and environmental perspectives. Cruz et al. (2012a) provided a conceptual diagram to support the implementation of consistent practices in LARG SC management. Cruz et al. [16] provided a framework for assessing the compatibility of in practices to enhance the competitiveness of LARG SC. Cabral et al. [9, 28] used the network analysis process technique to select the best SC practices in the automotive industry. Cabral et al. [10] provided an information model to support the operation of integrated paradigms in automotive SC management. Maleki et al. [29] conducted an empirical-theoretical comparison of four lean, agile, resilient and green paradigms. Carvalho et al. [11] examined the divergences and commonalities among LARG paradigms and also examined the effect of SC practices on the functional characteristics of the SC. Azevedo et al. [6, 7] proposed a conceptual model for LARG SC paradigms aimed at improving the economic, operational and environmental performance of the SC.

3. RESEARCH METHODOLOGY

In this paper, a hybrid FMCDM approach based on FDANP and ISM for examining the situation of LARG SC practices in Iranian dairy industry has been suggested. The main data of the research were collected by field method and through the distribution of the questionnaire among experts, i.e. the faculty members and top managers of dairy industries with adequate knowledge and understanding of the concept of LARG SC. The first questionnaire was distributed among experts for localizing of lean, agile, resilient and green practices in dairy industries using of fuzzy Saaty Delphi's method. The second questionnaire was distributed to determine the significance of the practices using a combination approach of FDANP that was distributed among industry experts. The third questionnaire used to determine the priority of implementation practices using ISM. A total of six questionnaires were distributed and collected that two of them were faculty members and four senior managers of dairy companies. Here the structure of the study (Figure 1) and step by step stages are presented to achieve aim. The method is used to explain LARG SC practices and the relationships among them in dairy industry in the form of 10 steps as is described below.

3. 1. Identification of Lean, Agile, Resilient and Green Paradigms Practices Initially, according to literature review of the research a set of practices were related to the SC paradigms, i.e. lean, agile, resilient and green, are extracted and by conducting fuzzy Saaty Delphi's method were localized. In order to localize, the experts specify the suitability of the practices by using linguistic variables in Table 1, in which we have $\tilde{L}_{ki} = (a_{ki}, b_{ki}, c_{ki})$, which represents the opinion of the k_{th} expert to practice i_{th}.

Then using Equation (1), the opinion of the experts is combined in which for i_{th} practice we have $\tilde{L}_i = (a_i, b_i, c_i)$.

$$a_i = \min\{a_{ki}\}$$
$$b_i = \frac{1}{e}\sum_{k=1}^{e} b_{ki} \quad \begin{matrix}\text{Number of experts } k = 1, 2, \dots, e \\ \text{Number of practices} i = 1, 2, \dots, n\end{matrix} \quad (1)$$
$$c_i = \max\{c_{ki}\}$$

Experts' opinion is integrated by taking advantage of Equation (2), consequently, the fuzzy number will be changed to the crisp number. If the value S_i is greater than eight [30], the corresponding practice is selected.

$$S_i = \frac{(a_i + 4\,b_i + c_i)}{6}, i = 1, 2, \dots, n \quad (2)$$

3. 2. Generating the Fuzzy Direct Relation Matrix In this step, the experts initially perform paired comparisons in terms of influencing and effectiveness of practices on each other using the linguistic variables of Table 2 [21]. Then, the expert's opinions are integrated with the mean arithmetic method and the fuzzy direct-relation matrix of the practices ($\tilde{A}_{pr.}$) in which an n × n matrix is obtained (Equation (3)).

$$\tilde{A}_{pr.} = \begin{bmatrix} 0 & \tilde{a}_{12} & \cdots & \tilde{a}_{1n} \\ \tilde{a}_{21} & 0 & 0 & \tilde{a}_{2n} \\ \vdots & \vdots & \ddots & \vdots \\ \tilde{a}_{n1} & \tilde{a}_{n2} & \cdots & 0 \end{bmatrix} \quad (3)$$

3. 3. Normalizing the Fuzzy Direct-Relation Matrix The normalized fuzzy direct relation matrix of practices ($\tilde{X}_{pr.}$) can be calculated using Equations (4)-(6).

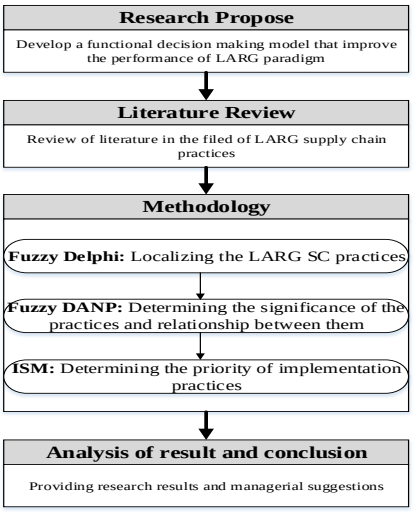

Figure 1. Research structure

Archive of SID

www.SID.ir

TABLE 1. Fuzzy Delphi triangular numbers [30]

Linguistic variables	Fuzzy triangular numbers
Absolutely inappropriate	(1, 0,0)
Inappropriate	(3, 1,0)
Fairly inappropriate	(5, 3,1)
Indifferent	(7, 5,3)
Fairly appropriate	(9, 7,5)
Appropriate	(10, 9,7)
Absolutely appropriate	(10, 10,9)

TABLE 2. Triangular numbers of the practices interactions [31]

Linguistic Variables	Fuzzy triangular numbers
No influence	(1, 0,0)
Very low influence	(2, 1,0)
Low influence	(3, 2,1)
High influence	(4, 3,2)
Very high influence	(4, 3,3)

3. 4. Attaining the Fuzzy Total-Relation Matrix of Practices and Paradigms After obtaining the $\widetilde{X}_{pr.}$matrix, the fuzzy relation matrix of the practices ($\widetilde{T}_{pr.}$) can be calculated employing Equation (7), where I is an identity matrix.

$$\widetilde{X}_{pr.}=\begin{bmatrix}\tilde{x}_{11} & \tilde{x}_{12} & \cdots & \tilde{x}_{1n}\\ \tilde{x}_{21} & \tilde{x}_{22} & \cdots & \tilde{x}_{2n}\\ \vdots & \vdots & \ddots & \vdots\\ \tilde{x}_{n1} & \tilde{x}_{n2} & \cdots & \tilde{x}_{nn}\end{bmatrix} \quad (4)$$

where:

$$\tilde{x}_{ij}=\frac{\tilde{a}_{ij}}{\tilde{r}}=\left(\frac{l_{ij}}{r},\frac{m_{ij}}{r},\frac{u_{ij}}{r}\right) \quad (5)$$

$$r=max_{i,j}\left(max_{1\le i\le n}\sum_{j=1}^{n}u_{ij},max_{1\le j\le n}\sum_{i=1}^{n}a\right),\ i,j\epsilon\ (1,2,\cdots,n) \quad (6)$$

$$\widetilde{T}_{pr.}=\widetilde{X}_{pr.}(I-\widetilde{X}_{pr.})^{-1} \quad (7)$$

It is worth mentioning that fuzzy total relation matrix of the paradigms $\widetilde{T}_{Pa.}$ (Equation (8)) is obtained by enforcing the arithmetic mean of each block in fuzzy total relation matrix of practices $\widetilde{T}_{pr.}$.

$$\tilde{T}_{Pa.}=\begin{bmatrix}\tilde{t}_{Pa.}^{11} & \dots & \tilde{t}_{Pa.}^{1j} & \dots & \tilde{t}_{Pa.}^{1n}\\ \vdots & & \vdots & & \vdots\\ \tilde{t}_{Pa.}^{i1} & \dots & \tilde{t}_{Pa.}^{ij} & \dots & \tilde{t}_{Pa.}^{in}\\ \vdots & & \vdots & & \vdots\\ \tilde{t}_{Pa.}^{n1} & \dots & \tilde{t}_{Pa.}^{nj} & \dots & \tilde{t}_{Pa.}^{nn}\end{bmatrix} \quad (8)$$

3. 5. Drawing the Cause-Effect Diagram of Paradigms and Practices After estimating the fuzzy total relation, matrices of paradigms ($\widetilde{T}_{Pa.}$) and practices ($\widetilde{T}_{pr.}$), $\widetilde{D}_i+\widetilde{R}_i$ and $\widetilde{D}_i-\widetilde{R}_i$ are calculated for paradigms and practices. $\widetilde{D}_i$ and $\widetilde{R}_i$ are equal to the sum of rows and columns elements of the fuzzy total relation matrix of paradigms and practices (Equations 9-10).

$$\widetilde{D}_i=\sum_{j=1}^{n}\tilde{t}_{ij}\ ,i=1,2,\dots,n \quad (9)$$

$$\widetilde{R}_i=\sum_{i=1}^{n}\tilde{t}_{ij}\ ,j=1,2,\dots,n \quad (10)$$

In order to form the cause-effect diagram of paradigms and practices, each of the above components is defuzzified by the mean method. $(\widetilde{D}_i+\widetilde{R}_i)^{def}$constitutes the horizontal axis of the diagram and $(\widetilde{D}_i-\widetilde{R}_i)^{def}$ the vertical axis of the diagram. In general, when $(\widetilde{D}_i-\widetilde{R}_i)^{def}$ is positive, it will be categorized as cause group and effective group otherwise.

3. 6. Forming the Initial Super Matrix In this step, fuzzy total relation matrix of practices ($\widetilde{T}_{pr.}$) is normalized in the row in which the components of each row (in each block) of practices fuzzy total relation matrix are divided into the sum of the related row elements. For example, $\tilde{T}_{pr.}^{\alpha 11}$, which is related to the first block, as shown in Equation (11). Equation (12) shows the normalized fuzzy total relation matrix of practices ($\tilde{T}_{pr.}^{\alpha}$). The matrix $\widetilde{T}_{pr.}^{\alpha}$ will be defuzzified by the mean method and then transposed. The resulting matrix is called the initial super-matrix (unweight) (Equation 13). i.e.: $W=\left(T_{pr.}^{\alpha}\right)'$.

3. 7. Obtaining the Weighted Super Matrix In this step, at first, the fuzzy total relation matrix of paradigms ($\widetilde{T}_{Pa.}$) is normalized in the row and the matrix $\widetilde{T}_{Pa}^{\alpha}$is calculated (Equation 14). Then, the matrix $\widetilde{T}_{Pa}^{\alpha}$ is defuzzified with the mean method and transposed, i.e. $(T_{Pa.}^{\alpha})'$. Finally, using Equation (15), the weighted supermatrix is obtained.

$$\tilde{d}_{pr.i}^{11}=\left(\sum_{j=1}^{m1}u_{ij}^{11},\sum_{j=1}^{m1}u_{ij}^{11},\sum_{j=1}^{m1}u_{ij}^{11}\right);\quad i=1,2,\dots m_1$$

$$\tilde{T}_{pr.}^{\alpha 11}=\begin{bmatrix}\tilde{t}_{pr.11}^{11}/\tilde{d}_{pr.1}^{11} & \dots & \tilde{t}_{pr.1j}^{11}/\tilde{d}_{pr.1}^{11} & \dots & \tilde{t}_{pr.1m_1}^{11}/\tilde{d}_{pr.1}^{11}\\ \vdots & & \vdots & & \vdots\\ \tilde{t}_{pr.i1}^{11}/\tilde{d}_{pr.i}^{11} & \dots & \tilde{t}_{pr.ij}^{11}/\tilde{d}_{pr.i}^{11} & \dots & \tilde{t}_{pr.im_1}^{11}/\tilde{d}_{pr.i}^{11}\\ \vdots & & \vdots & & \vdots\\ \tilde{t}_{pr.m_11}^{11}/\tilde{d}_{pr.m_1}^{11} & \dots & \tilde{t}_{pr.m_1j}^{11}/\tilde{d}_{pr.m_1}^{11} & \dots & \tilde{t}_{pr.m_1}^{11}/\tilde{d}_{pr.m_1}^{11}\end{bmatrix}= \quad (11)$$

$$\begin{bmatrix}\tilde{t}_{pr.11}^{\alpha 11} & \dots & \tilde{t}_{pr.1j}^{\alpha 11} & \dots & \tilde{t}_{pr.1m_1}^{\alpha 11}\\ \vdots & & \vdots & & \vdots\\ \tilde{t}_{pr.i1}^{\alpha 11} & \dots & \tilde{t}_{pr.ij}^{\alpha 11} & \dots & \tilde{t}_{pr.im_1}^{\alpha 11}\\ \vdots & & \vdots & & \vdots\\ \tilde{t}_{pr.m_11}^{\alpha 11} & \dots & \tilde{t}_{pr.m_1j}^{\alpha 11} & \dots & \tilde{t}_{pr.m_1}^{\alpha 11}\end{bmatrix}$$

Archive of SID

www.SID.ir

$$\tilde{T}^{\alpha}_{pr.} = \begin{array}{c} \\ Pa._1 \\ \\ \\ Pa._j \\ \\ \\ Pa._n \\ \\ \end{array} \begin{array}{c} \begin{array}{cccc} pr._{11} & Pa._1 & Pa._i & Pa._1 \end{array} \\ \begin{array}{cccc} pr._{12} & pr._{11}..pr._{1m_1} & pr._{i1}..pr._{im_i} & pr._{n1}..pr._n \end{array} \\ \begin{bmatrix} T^{\alpha 11} & \dots & T^{\alpha 1j} & \dots & T^{\alpha 1n} \\ \vdots & & \vdots & & \vdots \\ T^{\alpha i1} & \dots & T^{\alpha ij} & \dots & T^{\alpha in} \\ \vdots & & \vdots & & \vdots \\ T^{\alpha n1} & \dots & T^{\alpha nj} & \dots & T^{\alpha nn} \end{bmatrix} \end{array} \quad (12)$$

$$w = \left(T^{\alpha}_{pr.}\right)' = \begin{array}{c} \\ Pa._1 \\ \\ \\ Pa._j \\ \\ \\ Pa._n \\ \\ \end{array} \begin{array}{c} \begin{array}{cccc} pr._{11} & Pa._1 & Pa._i & Pa._1 \end{array} \\ \begin{array}{cccc} pr._{12} & pr._{11}..pr._{1m_1} & pr._{i1}..pr._{im_i} & pr._{n1}..pr. \end{array} \\ \begin{bmatrix} W^{11} & \dots & W^{i1} & \dots & W^{n1} \\ \vdots & & \vdots & & \vdots \\ W^{1j} & \dots & W^{ij} & \dots & W^{nj} \\ \vdots & & \vdots & & \vdots \\ W^{1n} & \dots & W^{in} & \dots & W^{nn} \end{bmatrix} \end{array} \quad (13)$$

$$\tilde{T}^{\alpha}_{Pa.} = \begin{bmatrix} \tilde{t}^{\alpha 11}_{Pa.} & \dots & \tilde{t}^{\alpha 1j}_{Pa.} & \dots & \tilde{t}^{\alpha 1n}_{Pa.} \\ \vdots & & \vdots & & \vdots \\ \tilde{t}^{\alpha i1}_{Pa.} & \dots & \tilde{t}^{\alpha ij}_{Pa.} & \dots & \tilde{t}^{\alpha in}_{Pa.} \\ \vdots & & \vdots & & \vdots \\ \tilde{t}^{\alpha n1}_{Pa.} & \dots & \tilde{t}^{\alpha nj}_{Pa.} & \dots & \tilde{t}^{\alpha nn}_{Pa.} \end{bmatrix} \quad (14)$$

$$W^{\alpha} = (T^{\alpha}_{Pa.})'.W = \begin{bmatrix} (t^{\alpha 11}_{Pa.}) \times W^{11} & \dots & (t^{\alpha i1}_{Pa.}) \times W^{i1} & \dots & (t^{\alpha n1}_{Pa.}) \times W^{n1} \\ \vdots & & \vdots & & \vdots \\ (t^{\alpha 1j}_{Pa.}) \times W^{1j} & \dots & (t^{\alpha ij}_{Pa.}) \times W^{ij} & \dots & (t^{\alpha nj}_{Pa.}) \times W^{nj} \\ \vdots & & \vdots & & \vdots \\ (t^{\alpha 1n}_{Pa.}) \times W^{1n} & \dots & (t^{\alpha in}_{Pa.}) \times W^{in} & \dots & (t^{\alpha nn}_{Pa.}) \times W^{nn} \end{bmatrix} \quad (15)$$

3. 8. Limiting the Weighted Super Matrix This matrix is calculated by Equation (16), which shows the final weight of each practice (W_{xi}).

$$\text{The final super matrix} = (\text{weighted supermatrix})^{2k+1} \quad (16)$$

3. 9. Calculating Paradigm's Weight The significance of each paradigm i.e. the lean, agile, resilient and green paradigms (W_x) is computed by using Equations (17 and 18) [32].

$$w_x = \left\{\left(\tilde{D}_i^{def} + \tilde{R}_i^{def}\right)^2 + \left(\tilde{D}_i^{def} - \tilde{R}_i^{def}\right)^2\right\}^{\frac{1}{2}} \quad (17)$$

$$W_x = \frac{w_x}{\sum_{x=L}^{G} w_x} \quad (18)$$

3. 10. Determining the Priority of Practice Implementation The priority of the LARG practice implementation is determined based on the effective strength and degree of dependence using the ISM method as below [22]:

3. 10. 1. Establishing Contextual Relationship A contextual relationship is established out of mentioned practices to identify the practice pairs which should be examined.

3. 10. 2. Attaining Self-Interaction Matrix (SSIM) A structural self-interaction matrix (SSIM) is developed for practices, indicating pair-wise relationships among the practices of the system under consideration.

3. 10. 3. Attaining Reachability Matrix Reachability matrix is obtained from SSIM and the matrix is checked for transitivity. Transitivity of contextual relation is a fundamental assumption in ISM. It states that if variable A is related to B and B to C, then A is necessarily related to C. Then, the reachability matrix is partitioned into different levels.

3. 10. 4. Developing Digraph Based on relationships stated in the reachability matrix, a directed graph is drawn and transitive links removed. The resultant digraph is converted into an ISM, by replacing variable nodes with statements. Then, the developed ISM model is checked for conceptual inconsistency and necessary modifications are made. This model can be used for analyzing and identifying the implementation priority of practices.

4. RESEARCH FINDINGS

In the first step, 166 practices were extracted from the literature review of the research, of which 52 practices (32%) are lean SC, 32 practices (19%), agile SC, 42 practices (25%) resilient SC, and 40 practices (24%) green SC. After localization, 21 practices were selected, which 5 practices (24%) are lean, agile and green SC and 6 practices (28%) are resilient SC (Table 3).

In the second step, fuzzy direct relation matrix of practices was performed by experts using paired comparisons (Table 4). The reliability of the fuzzy direct-relation matrix of practices is 97.83%, which indicates the high validity of this table. In step 3, the fuzzy direct-relation matrix of practices was normalized, and in step 4, the fuzzy total relation matrix of the practices and paradigms was calculated. The fuzzy total relation matrix of paradigms is shown in Table 5.

In the fifth step, the cause-effect diagram of paradigms and practices was drawn (Figure 2). It is worth noting that the threshold of paradigms and practices has been calculated by the arithmetic mean method. The threshold limit for paradigms is 0.9, the practices of lean, agile, resilient, and green SC are 0.14, 0.11, 0.09 and 0.08, respectively.

Archive of SID

www.SID.ir

According to Figure 2, CRM and IT were in the cause group and F, QR and RR in effect group. Information technology has a direct impact on quick responsiveness to customer's needs.

Therefore, the creation of the necessary infrastructure for the use of information technology can play a significant role in response acceleration to customers need. Therefore, the creation of the necessary infrastructure for the use of information technology can play a significant role in increasing the quickness of responsiveness to customers.

Regarding the cause-effect diagram of resilient SC practices (Figure 2), just RLR was in the effect group and other practices were found in the cause group. DV is considered to be the most effective practice. It should be noted that minimum level of service while undergoing disruptions has the greatest interaction with other resilient practices, which is very important.

TABLE 3. Selected practices of LARG SC

No.	LARG Paradigms	LARG Practices	References	S_i
1	Lean SC	Just in Time Production (JIT)	[6, 7, 8, 11, 15, 29, 33, 34, 35]	9.39
2		Close & Long-term Relationship with Suppliers (RS)	[6, 7, 8, 11, 15, 18 ,35, 36, 37]	9.17
3		Production based on Takt time (TT)	[11, 34, 36]	8.17
4		Vendor Inventory Management (VIM)	[15,16,17, 35]	8.50
5		Production Leveling (PL)	[15, 33, 34, 35, 36, 37]	9.28
1	Agile SC	Using Information Technology (IT)	[8, 15, 18, 38]	8.50
2		Flexibility (F)	[6, 7, 11, 15, 18, 29, 38]	9.17
3		Quick Responsiveness to Customer's Needs (QR)	[6, 7, 11, 15, 39]	9.28
4		Rapid Reconfiguration the Production Process (RR)	[6, 7, 15, 29]	9.06
5		Customer Relationship Management (CRM)	[11, 15, 38, 40]	9.17
1	Resilient SC	Minimum Level of Service while Undergoing Disruptions (MSD)	[11, 15, 18, 41]	8.06
2		Sourcing Strategy to Allow Switching of Suppliers (SS)	[8, 11, 15, 18, 29, 36]	9.17
3		Ability to Reduce Likely Risks (RLR)	[8, 11, 15, 18, 41]	8.50
4		Developing Visibilities in Total SC (DV)	[6, 78, 11, 15, 18, 29, 35]	9.17
5		Active Participation of Managers and Staff in Recovery Process (PRP)	[8, 18, 36, 41]	8.39
6		Maintaining a Dedicated Transit Fleet (DTF)	[8, 11, 15, 18]	9.28
1	Green SC	Prequalification of Suppliers (PS)	[8, 15, 29, 42]	9.06
2		Green Logistic (GL)	[8, 15, 29, 43]	8.50
3		Green Design (GD)	[8, 11, 15, 43]	9.39
4		Efficient Use of Natural Resource (EUR)	[8, 11, 15, 18]	8.50
5		ISO 14001 (ISO)	[8, 15, 18, 43]	9.17

TABLE 4. The Fuzzy Direct Relation Matrix of Practices ($\tilde{A}_{pr.}$)

	JIT	RS	TT	VIM	PL	…	PS	GL	GD	EUR	ISO
JIT	(0,0,1)	(2.17,2.83,3.83)	(3,3,4)	(3,3,4)	(3,3,4)	…	(0,0,1)	(0,0,1)	(0,0,1)	(0,0,1)	(0,0,1)
RS	(2.67,3,4)	(0,0,1)	(2.83,3,4)	(2.17,2.83,3.83)	(2.67,3,4)	…	(2.67,3,4)	(2.17,2.83,3.83)	(1.83,2.67,3.67)	(0,0,1)	1.83,2.67,3.67)
TT	(3,3,4)	(2.67,3,4)	(0,0,1)	(2.83,3,4)	(2.83,3,4)	…	(0,0,1)	(0,0,1)	(0,0,1)	(0,0,1)	(0,0,1)
GD	(0,0,1)	(2,2.67,3.67)	(0,0,1)	(0,0,1)	(0,0,1)	…	(3,3,4)	(2.33,3,4)	(0,0,1)	(2.5,3,4)	(2.33,3,4)
EUR	(0,0,1)	(0,0,1)	(2.5,3,4)	(0,0,1)	(2.67,3,4)	…	(2.5,3,4)	(1.86,2.67,3.67)	(2.33,3,4)	(0,0,1)	1.86,2.67,3.67)
ISO	(0,0,1)	(2.5,3,4)	(0,0,1)	(0,0,1)	(0,0,1)	…	(3,3,4)	(2.5,3,4)	(2.33,3,4)	(1.33,2.33,3.33)	(0,0,1)

Inconsistent rate (%)=$\frac{1}{n(n-1)}\sum_{i=1}^{n}\sum_{j=1}^{n}\left[\left(a_{ij}^{6}-a_{ij}^{5}\right)/a_{ij}^{6}\right]\times 100\% = 2.17\% < 5\%$; *Credibility*= $1-2.17\% = 97.83\%$

Archive of SID

www.SID.ir

TABLE 5. The fuzzy total relation matrix of paradigms ($\tilde{T}_{pa.}$)

	Lean	Agile	Resilient	Green
Lean	(0.055, 0.078,0.28)	(0.048,0.074,0.258)	(0.04, 0.063, 0.238)	(0.015, 0.025, 0.167)
Agile	(0.048,0.074,0.261)	(0.026, 0.058, 0.228)	(0.033, 0.055, 0.217)	(0.01, 0.019, 0.15)
Resilient	(0.026,0.06,0.231)	(0.03, 0.051, 0.208)	(0.026, 0.046, 0.194)	(0.008, 0.017, 0.137)
Green	(0.015,0.025,0.164)	(0.007, 0.016, 0.144)	(0.008, 0.017, 0.138)	(0.027, 0.049, 0.147)

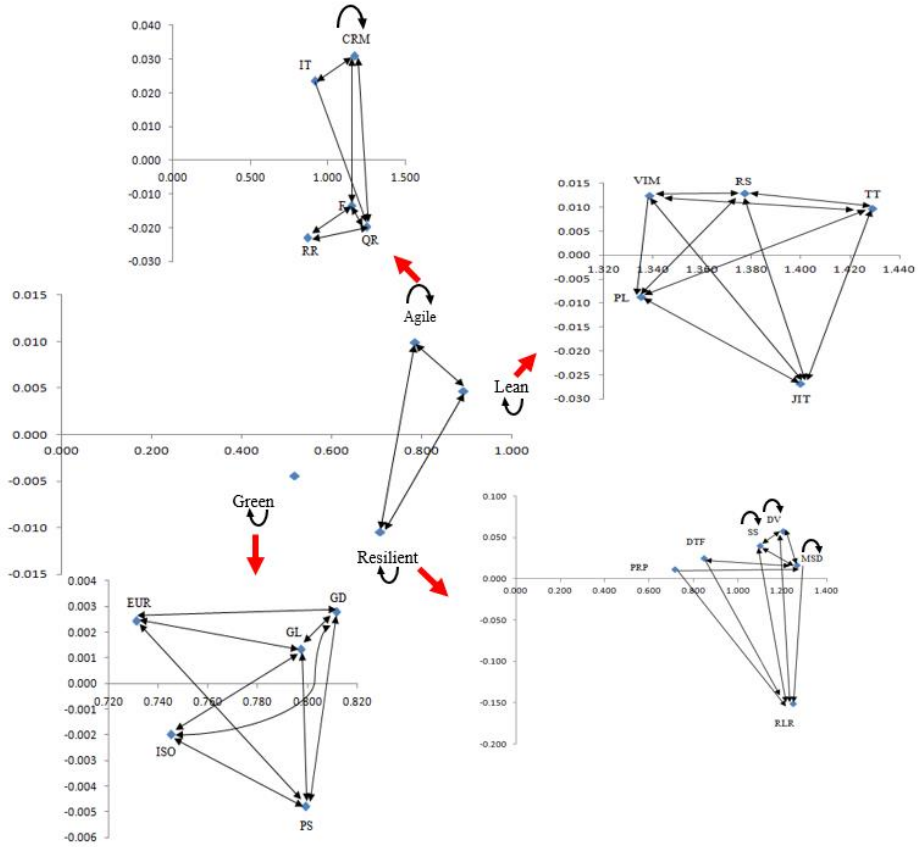

Figure 2. The cause-effect diagram of paradigms and practices

As shown in Figure 2, GD, EUR and GL were in cause group and the ISO certification and PS in the effect group. Green design is both the most influential practice and has the most interaction with other practices, which indicates the high importance of this practice.

In step six, using the fuzzy total relation matrix of practices ($\tilde{T}_{pr.}$), the initial super-matrix was formed (Table 6) and then weighted super matrix was calculated (Table 7). In step eight, the weighted super matrix was converged in 15th power and limited super matrix was computed that shows the global weight of practices. As shown in Table 8, just in time (JIT, 0.0657) and production based on Takt time (TT, 06.051) are considered the most important practices and active participation of managers and staff in the recovery process (PRP, 0.0219) the least important practices in dairy industries SC.

In the ninth step, the significance of paradigms was calculated and prioritized using the fuzzy DEMATEL method. The importance of lean SC paradigm is 0.307, agile SC 0.270, the resilient SC 0.244 and the green SC 0.178. Lean and green paradigms are the most important and the least important paradigms in the dairy industries SC, respectively.

In step ten, the priority of LARG practice implementation was determined using the ISM method. In this regards, for establishing contextual relationship a questionnaire was first distributed among six experts and the results were gathered together (Table 9). After forming the self-interaction matrix with a threshold of 12, the reachability matrix (Table 10) was obtained. Finally, an interpretative model was drawn that shows the priority of the deployment of practices on seven levels (Figure 3). As shown in Figure 3, practices of just in time, Takt time,

www.SID.ir

the relationship with suppliers, and developing visibility, have the highest priority in the deployment of dairy industries SC and serve as the basis for the deployment of other practices, because they affect all the practices. Interestingly, green SC practices have the lowest priority for deployment due to their effectiveness.

TABLE 6. Initial Super Matrix $W = \left(T_{pr.}^{\alpha}\right)'$

	JIT	RS	TT	VIM	PL	…	PS	GL	GD	EUR	ISO
JIT	0.079	0.105	0.109	0.109	0.108	…	0.071	0.073	0.073	0.068	0.07
RS	0.101	0.078	0.104	0.100	0.105	…	0.132	0.121	0.121	0.076	0.131
TT	0.108	0.105	0.079	0.108	0.108	…	0.072	0.074	0.075	0.117	0.071
…	…	…	…	…	…	…	…	…	…	…	…
GD	0.078	0.104	0.076	0.079	0.076	…	0.125	0.121	0.067	0.119	0.122
EUR	0.076	0.068	0.122	0.077	0.124	…	0.113	0.106	0.113	0.064	0.099
ISO	0.067	0.094	0.065	0.067	0.065	…	0.119	0.114	0.111	0.105	0.059

TABLE 7. Weighted Super Matrix

	JIT	RS	TT	VIM	PL	…	PS	GL	GD	EUR	ISO
JIT	0.011	0.015	0.016	0.016	0.016	…	0.008	0.008	0.008	0.008	0.008
RS	0.015	0.011	0.015	0.015	0.015	…	0.015	0.014	0.014	0.009	0.015
TT	0.016	0.015	0.012	0.016	0.016	…	0.008	0.009	0.009	0.013	0.008
…	…	…	…	…	…	…	…	…	…	…	…
GD	0.006	0.008	0.006	0.006	0.006	…	0.016	0.016	0.009	0.016	0.016
EUR	0.006	0.005	0.009	0.006	0.009	…	0.015	0.014	0.015	0.008	0.013
ISO	0.005	0.007	0.005	0.005	0.005	…	0.016	0.015	0.015	0.014	0.008

TABLE 8. Degree of importance and rank of practices

	JIT	RS	TT	VIM	PL	IT	F	QR	RR	CRM	
Degree of importance	0.0657	0.0644	0.0651	0.0605	0.0602	0.045	0.0589	0.0617	0.045	0.0597	
Rank	1	3	2	5	6	13	8	4	14	7	
	MSD	**SS**	**RLR**	**DV**	**PRP**	**DTF**	**PS**	**GL**	**GD**	**EUR**	**ISO**
Degree of importance	0.0477	0.0474	0.0503	0.0478	0.0219	0.0317	0.0333	0.0347	0.0349	0.0338	0.300
Rank	11	12	9	10	21	19	18	16	15	17	20

TABLE 9. Results from questionnaires

	JIT	RS	TT	VIM	PL	…	PS	GL	GD	EUR	ISO
JIT		16	15	9	13	…	7	6	5	12	5
RS	11		10	9	13	…	13	8	13	8	8
TT	15	10		11	14	…	7	6	6	5	6
…	…	…	…	…	…	…	…	…	…	…	…
GD	5	4	3	6	4	…	15	15		14	15
EUR	6	5	6	5	4	…	9	13	13		9
ISO	4	3	5	3	4	…	14	9	14	9	

Archive of SID

www.SID.ir

TABLE 10. Reachability matrix

	JIT	RS	TT	VIM	PL	…	PS	GL	GD	EUR	ISO
JIT	1	1	1	1	1	…	1	1	1	1	0
RS	0	1	1	0	1	…	1	1	1	1	1
TT	1	1	1	0	1	…	0	0	0	1	0
…	…	…	…	…	…	…	…	…	…	…	…
GD	0	0	0	0	0	…	1	1	1	1	1
EUR	0	0	0	0	0	…	1	1	1	1	1
ISO	0	0	0	0	0	…	1	1	1	1	1

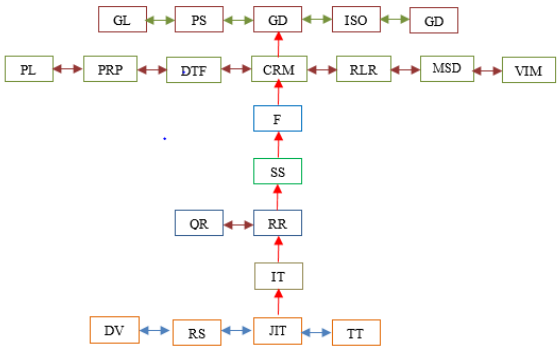

Figure 3. Interpretative Structural Model

5. CONCLUSION AND SUGGESTION

ARG SC management is a social-technical system that its main purpose is to reduce waste, respond effectively to changing customers' requirements, adapt to new environmental risks and adopt environment-friendly policies and practices. The LARG SC, as a new paradigm, plays an important role in gaining the sustainable competitive advantage, which has attracted much attention from the researchers in recent years. However, many researchers focused solely on the impact of LARG paradigm on the strength of competitiveness and SC performance or examined the extent to which the SC practices were consistent, and less attention was paid to introducing practices and clarifying the relationships between them in order to move towards LARG. Therefore, the present research has provided a coherent approach to identify LARG practices, structure effectiveness relationships and determine the priority of their deployment so that companies active in the SC of dairy industries create the necessary infrastructures to apply the most important practices to gain competitive advantage. It should be noted that the approach employed in the present study will significantly reduce the volume of computations so that only using a paired comparisons matrix can determine the significance of the paradigms and practices, and draw the map of cause-effect relationships of the paradigms and practices. The results indicate that, lean and green are the most and the least important SC paradigms, respectively. Also, the most effective and the most affected paradigms are agile and resilient. Just in time and production based on takt time are considered the most important practices and active participation of managers and staff in the recovery process is the least important practices. In addition, just in time, takt time, relationships with suppliers and developing visibility in SC have the highest priority in order to implement in dairy SC.

According to the results, being lean is one of the most important paradigms in the SC, on the one hand, and has the most interaction with other paradigms, on the other hand. Since researchers believe that being lean is a pre-requisite for agility [44, 45]; therefore companies active in dairy industries SC should be more focused on implementing and employing lean principles, so that they can provide an appropriate infrastructure to implement the agility paradigm, and subsequently the resilient and green paradigms.

According to the findings of the present research, it is suggested that companies active in the dairy industries SC have replaced the close relationship and win-win trust with suppliers with win-loss and develop cooperative and sustainable relationships with them. In addition, it improves relationships with customer by more interaction with customers, collecting and analyzing data on company's customers, and generally focusing on customers keeping and maintaining. Active companies in the chain supply should share information on the ordering and transportation of products and logistics activities with other actors of SC with the accurate planning and reciprocal trust-based approach in order to provide the correct decision by increasing the accuracy and velocity of information transmission.

Companies active in dairy industries SC by implementing the green design, including designing products to reduce energy/ material consumption; designing products to avoid or reduce hazardous materials in the product and designing the product for assembly can improve other practices related to the green SC paradigm.

Archive of SID

www.SID.ir

Despite the contributions of this paper, limitations of the study should be noted. First, the proposed practices have focused on dairy industry and may not be applicable to different sector. Second, the research's data are connected to the Iranian case study, we cannot be sure that these results will be usable for another geographical area. It is suggested that in further researches, other FMCDM techniques such as FTOPSIS, FELECTRE, and FPROMETHEE be used for ranking companies based on their performance in term of implementation level of these practices.

6. REFERENCES

1. Fard, A. M. F., Gholian-Jouybari, F., Paydar, M. M., & Hajiaghaei-Keshteli, M., "A Bi-Objective Stochastic Closed-loop Supply Chain Network Design Problem Considering Downside Risk", ***Industrial Engineering and Management System,*** Vol. 16, (2017), 342-362.
2. Nourmohamadi Shalke, P., Paydar, M. M., & Hajiaghaei-Keshteli, M., "Sustainable supplier selection and order allocation through quantity discounts", ***International Journal of Management Science and Engineering Management,*** (2017), 2-13.
3. Sahraeian, R., Bashiri, M., & Moghadam, A. T., "Capacitated multimodal structure of a green supply chain network considering multiple objectives", ***International Journal of Engineering-Transactions C: Aspects***, Vol. 26, No. 9, (2013), 963-974.
4. Moubed, M., & Mehrjerdi Zare, Y., "A hybrid dynamic programming for inventory routing problem in collaborative reverse supply chains", ***International Journal of Engineering, Transactions A: Basics***, Vol. 29, No. 10, (2016), 1412-1420.
5. Fard, A. M. F., & Hajaghaei-Keshteli, M., "A tri-level location-allocation model for forward/reverse supply chain", ***Applied Soft Computing,*** Vol. 62, (2018), 328-346.
6. Azevedo, S. G., Carvalho, H., & Machado, V. C. "The influence of LARG supply chain management practices on manufacturing supply chain performance", In Proceedings of International Conference on Economics, Business and Marketing Management, (2011), 1-6.
7. Azevedo, S. G., Carvalho, H., & Machado, V. C., "A proposal of LARG supply chain management practices and a performance measurement system",***International Journal of e-Education, e-Business, e-Management and e-Learning,*** Vol. 1, (2011), 7-14.
8. Azevedo, S., Carvalho, H., & Cruz-Machado, V., "Proposal of a conceptual model to analyse the influence of LARG practices on manufacturing supply chain performance", ***Journal of Modern Accounting & Auditing,*** Vol. 8, (2012), 174-184.
9. Cabral, I., Espadinha-Cruz, P., Grilo, A., Puga-Leal, R., & Cruz-:Machado, V., "Decision-Making Models for Interoperable Lean, Agile, Resilient and Green Supply Chains", In Proceedings of the International Symposium on the Analytic Hierarchy Process, (2011), 1-6.
10. Cabral, I., Grilo, A., Leal, R. P., & Machado, V. C., "Modeling Lean, Agile, Resilient, and Green Supply Chain Management", Information Technology Interfaces (ITI), Proceedings of the ITI 2011 33rd International Conference on IEEE, (2011), 365-370.
11. Carvalho, H., Duarte, S., & Cruz Machado, V., "Lean, agile, resilient and green: divergencies and synergies", ***International Journal of Lean Six Sigma,*** Vol. 2, (2011), 151-179.
12. Maleki, M., Shevtshenko, E. & Machado, V. C., "Development of Supply Chain Integration model through application of Analytic Network Process and Bayesian Network", ***International Journal of Integrated Supply Management,*** Vol. 8, (2013),67-89.
13. Maleki, M., & Machado, V. C., "Generic integration of lean, agile, resilient, and green practices in automotive supply chain", ***Revista de Management Comparat International***, Vol. 14, (2013), 237-248.
14. Carvalho, H., Azevedo, S. & Cruz-Machado, V., "Trade-offs among lean, agile, resilient and green paradigms in supply chain management: a case study approach", In Proceedings of the Seventh International Conference on Management Science and Engineering Management, (2014), 953-968.
15. Cruz, E. P., Cabral, I., & Grilo, A., "LARG Interoperable Supply Chains: from Cooperation Analysis to Design", **In *Intelligent Decision Technologies: Proceedings of the 5th KES International Conference on Intelligent Decision Technologies***, Vol. 255, (2013), 255.
16. Cruz, E. P., Cabral, I., Grilo, A., & Cruz-Machado, V., "Information model for LARGeSCM interoperable practices", In Information Technology Interfaces (ITI), Proceedings of the ITI 34th International Conference on IEEE, (2012a), 23-28.
17. Cruz, E. P., Grilo, A., & Cruz-Machado, V., "Fuzzy evaluation model to assess interoperability in LARG Supply Chains", In Fuzzy Systems and Knowledge Discovery (FSKD), 9th International Conference on IEEE, (2012b), 75-79.
18. Santos, J. P. P. D. "A simulation model for Lean, Agile, Resilient and Green Supply Chain Management: practices and interoperability assessment", Doctoral dissertation, Faculdade de Ciências e Tecnologia, (2013).
19. Donk, P. V. D., Akkerman, R., & Van der Vaart, T., "Opportunities and realities of supply chain integration: the case of food manufacturers", ***British Food Journal***, Vol. 110, (2008), 218-235.
20. Gölcük, İ., & Baykasoğlu, A. "An analysis of DEMATEL approaches for criteria interaction handling within ANP" ***Expert Systems with Applications,*** Vol. 46, (2016). 346-366.
21. Ghadikolaei, A. H. S., Akbarzadeh, Z., Ahmadi, A., & Geshniani, Y. V., "Applying hybrid FMADM model for analysing SWOT strategies at the Iranian industrial engines manufacturing firm (a case study)", ***International Journal of Productivity and Quality Management***, Vol. 20, (2017), 462-487.
22. Beikkhakhian, Y., Javanmardi, M., Karbasian, M. & Khayambashi, B., "The application of ISM model in evaluating agile supplier's selection criteria and ranking suppliers using fuzzy TOPSIS-AHP methods", ***Expert Systems with Applications,*** Vol. 42, no. 15-16 (2015), 6224-6236.
23. Kannan, G., Pokharel, S., & Sasi Kumar, P., "A hybrid approach using ISM and fuzzy TOPSIS for the selection of reverse logistics provider. Resources", ***Conservation and Recycling***, Vol. 54, (2009), 28–36.
24. Attri, R., Dev, N., & Sharma, V., "Interpretive structural modeling (ISM) approach: an overview", ***Research Journal of Management Sciences,*** 2319, (2013), 1171.
25. Pfohl, H. C., Gallus, P., & Thomas, D.,"Interpretive structural modeling of supply chain risks", ***International Journal of Physical Distribution & Logistics Management,*** Vol. 41, No. 9, (2011). 839-859.
26. Cheraghalipour, A., Paydar, M. M., & Hajiaghaei-Keshteli, M., "An integrated approach for collection center selection in reverse logistics", ***International Journal of Engineering, Transactions A: Basics,*** Vol. 30, (2017), 1005-1016.
27. Carvalho, Helena; Cruz Machado, V, "Lean, agile, resilient and green supply chain: a review", Proceedings of the Third International Conference on Management Science and Engineering Management, Thailand, (2009), 3–14.
28. Cabral, I., Grilo, A., & Cruz-Machado, V., "A decision-making model for lean, agile, resilient and green supply chain

www.SID.ir

management", ***International Journal of Production Research***, Vol. 50, (2012), 4830-4845.

29. Maleki, M., da Cruz, P. E., Valente, R. P., & Machado, V. C., "Supply Chain Integration Methodology: LARGe Supply Chain", ***Encontro Nacional de Engenharia e Gestão Industrial***, (2011), 57-66.
30. Jassbi, A., Jassbi, J., Akhavan, P., Chu, M. T., & Piri, M., "An empirical investigation for alignment of communities of practice with organization using fuzzy Delphi panel", ***VINE***, Vol. 45, (2015), 322-343.
31. Liou, J. J., Yen, L., & Tzeng, G. H., "Building an effective safety management system for airlines", ***Journal of Air Transport Management,*** Vol. 14, (2008), 20-26.
32. Dalalah, D., Hayajneh, M., & Batieha, F., "A fuzzy multi-criteria decision making model for supplier selection", ***Expert systems with applications,*** Vol. 38, (2011), 8384-8391.
33. Büyüközkan, G., Kayakutlu, G., & Karakadılar, İ. S., "Assessment of lean manufacturing effect on business performance using Bayesian Belief Networks", ***Expert Systems with Applications,*** Vol. 42, No. 19, (2015), 6539-6551.
34. Netland, T. H., Schloetzer, J. D., & Ferdows, K, "Implementing corporate lean programs: the effect of management control practices", ***Journal of Operations Management***, Vol. 36, (2015), 90-102.
35. Sharma, V., Dixit, A. R., & Qadri, M. A., "Impact of lean practices on performance measures in context to Indian machine tool industry", ***Journal of Manufacturing Technology Management,*** Vol. 26, No. 8, (2015), 1218-1242.
36. Birkie, S. E., "Operational resilience and lean: In search of synergies and tradeoffs", ***International Journal of Manufacturing Technology and Management (IJMTM)***, Vol. 27, No. 2, (2016), 185-207.
37. Nawanir, G., Nawanir, G., Lim, K. T., Lim, K. T., Othman, S. N., & Othman, S. N., "Lean manufacturing practices in Indonesian manufacturing firms: Are there business performance effects?", ***International Journal of Lean Six Sigma,*** Vol. 7, No. 2, (2016), 149-170.
38. Mehralian, G., Zarenezhad, F., & Rajabzadeh Ghatari, A., "Developing a model for an agile supply chain in pharmaceutical industry", ***International Journal of Pharmaceutical and Healthcare Marketing***, Vol. 9, No. 1, (2015), 74-91.
39. Tse, Y. K., Zhang, M., Akhtar, P., & MacBryde, J., "Embracing supply chain agility: an investigation in the electronics industry", ***Supply Chain Management: An International Journal,*** Vol. 21, No. 1, (2016), 140-156.
40. Durrani, U. K., Pita, Z., & Richardson, J., "Coexistence of agile and SCM practices: an exploratory study of Australian agile software development organizations", ***Journal of Systems and Information Technology,*** Vol. 16, No. 1, (2014), 20-39.
41. Francis, R., & Bekera, B, "A metric and frameworks for resilience analysis of engineered and infrastructure systems", ***Reliability Engineering & System Safety,*** Vol. 121, (2014), 90-103.
42. Hoejmose, S. U., Grosvold, J., & Millington, A., "The effect of institutional pressure on cooperative and coercive 'green'supply chain practices", ***Journal of Purchasing and Supply Management,*** Vol. 20, No. 4, (2014), 215-224.
43. Govindan, K., Khodaverdi, R., & Vafadarnikjoo, A., "Intuitionist fuzzy based DEMATEL method for developing green practices and performances in a green supply chain", ***Expert Systems with Applications,*** Vol. 42, No. 20, (2015), 7207-7220.
44. rishnamurthy, R. and Yauch, C.A., "Leagile manufacturing: a proposed corporate infrastructure", ***International Journal of Operations and Production Management,*** Vol. 27, (2007), 588-604.
45. Wan, H.D., "Measuring Leanness of Manufacturing Systems and Identifying Leanness Target by Considering Agility", PhD Thesis, The Virginia Polytechnic Institute and State University**,** (2006).

A Hybrid Fuzzy Multi-criteria Decision Making Model Based on Fuzzy DEMATEL with Fuzzy Analytical Network Process and Interpretative Structural Model for Prioritizing LARG Supply Chain Practices

Z. Akbarzadeh, A. H. Safaei Ghadikolaei, M. Madhoushi, H. Aghajani

Department of Industrial Management, University of Mazandaran, Babolsar, Iran.

P A P E R I N F O

Paper history:
Received 02 January 2018
Received in revised form 29 March 2018
Accepted 27 May 2018

Keywords:
LARG Supply Chain
LARG Practices
FDANP Technique
Interpretative Structural Model
Dairy Industries

چکیده

طی سال‌های اخیر، بکارگیری پارادایم زنجیره تأمین لارج (ترکیبی از چهار پارادایم ناب، چابک، تاب‌آور و سبز) به‌طور فزاینده‌ی در حال افزایش است. جهت بهره‌برداری از مزایای پارادایم لارج در زنجیره تأمین، ابتدا باید اقدامات مناسب شناسایی شوند و با برنامه‌ریزی صحیح بستر لازم برای جاری ساختن آنها فراهم گردد. با این حال، یکی از نقاط ضعف این حوزه فقدان روشی مناسب برای اولویت‌بندی اقدامات و پارادایم‌های لارج و تبیین روابط بین آنها است. در همین راستا، پژوهش حاضر درصدد است یک رویکرد جامع بر مبنای مدل تصمیم‌گیری چند معیاره فازی ارائه دهد بطوریکه ضمن مقابله با ابهام و عدم اطمینان موجود در فرآیند تصمیم‌گیری، جمع‌آوری داده را تسهیل کرده و حجم محاسبات را کاهش دهد. با استفاده از این مدل کمی، که ترکیبی از تکنیک‌های دیمتل فازی و فرآیند تحلیل شبکه فازی یا به اختصار FDANP است درجه اهمیت اقدامات و پارادایم‌های زنجیره تأمین لارج تعیین و روابط علی بین آنها را ترسیم می‌شود.در نهایت با استفاده از روش مدل ساختاری تفسیری اولویت اجرای هر یک از اقدامات تعیین خواهد شد. همچنین به‌منظور سنجش بهتر کارایی رویکرد پیشنهادی، صنایع لبنی ایران به‌عنوان مطالعه موردی بررسی گردید. با توجه به نتایج مدل، بااهمیت ترین و کم‌اهمیت ترین پارادایم و اقدامات و نیز اولویت اجرای آنها تعیین شد.

***doi**: 10.5829/ije.2019.32.03c.09*

Archive of SID

www.SID.ir